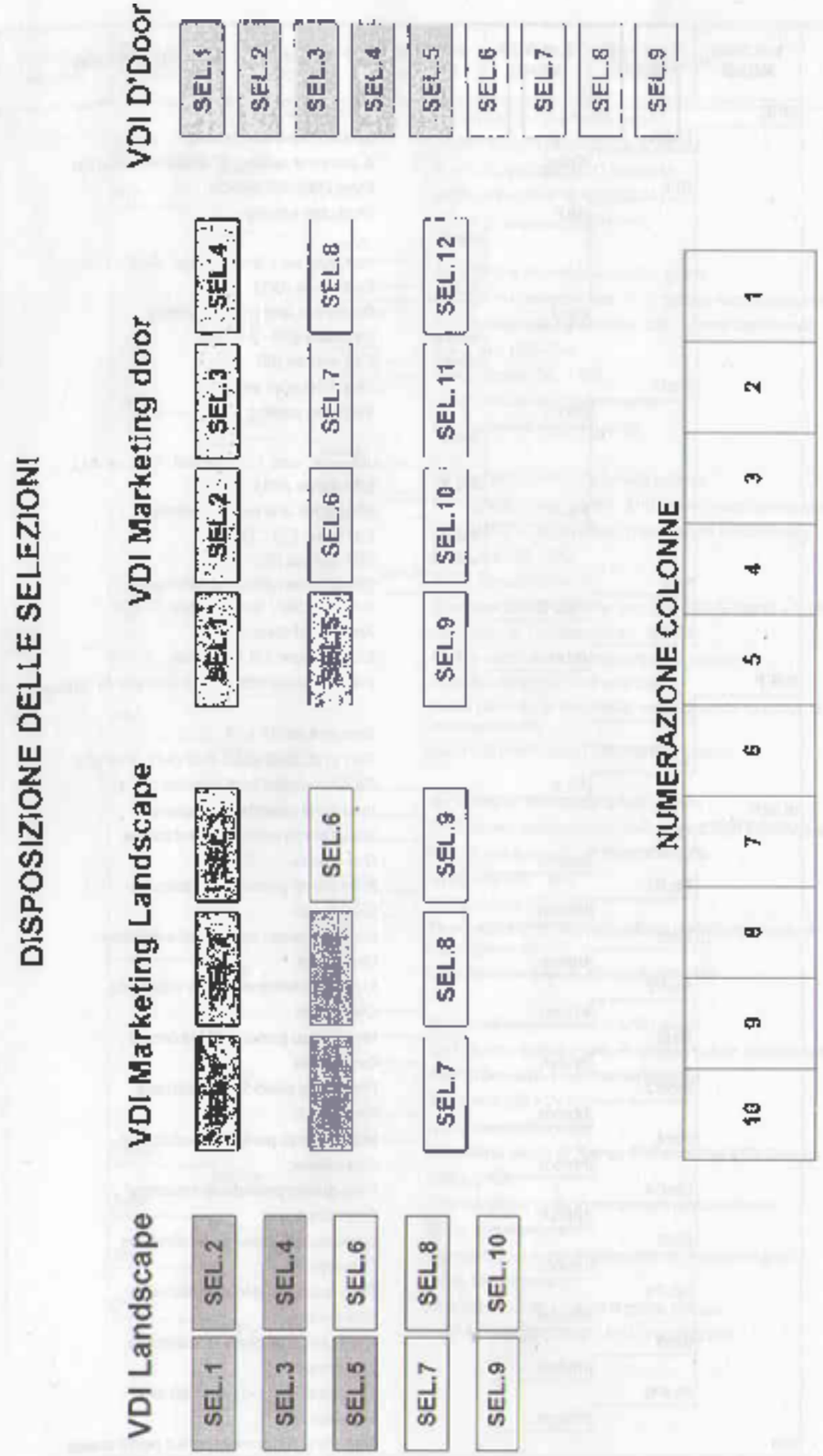

ITALIANO

www.supervending.ru по вопросам приобретения оборудования звоните 8-499-409-8145

SuperVending

Vendo

PROGRAMMING MANUAL
MDB / EXECUTIVE SN02 BOARD

HARDWARE FEATURE

This board called SN02 has all functions inboard.

Power supply : 19 Volt AC 2 A rms / 26 Volt AC NO FILTERED 4 A rms
10 Volt AC 1,5 A rms

12 motor outputs 24 VDC 1 A
10 motor micro-switches
10 sold-out micro-switches
14 sold-out leds
14 selections switches
1 Door switch
2 Analogics inputs (for temperature control)
1 Real time clock

DEX/UCS audit output. Jack plug and TTL signal (in option RS232 for serial printer or Plug & Go Kit to read-out data or program the machine using chip card).

External slave board (placed near the box transformer) used to control refrigerant system, fluorescent tube and heater kit (optional).

The board uses an 80C552 microcontroller with up to 1024K or program
Setting and audit saved on EEPROM

Display 5 digits 7 led segments and decimal point
In option display fluorescent 2 lines 20 characters (Cyrillic characters available)
A correct change led indicator

Master and Slave optically isolated serial link for MDB
EXECUTIVE

SOFTWARE FEATURE

The SN02 software includes all above functions

Service Programming routine
Credit Accumulation
Coin Mechanism Interface
Consumer Manipulation and Vend process
Multi pricing
Programmable Space to Sales
Escrow
Sold-out Indication
Correct change Indicator
Manual Payout
Manual Tubes filling
Saved Error listing - Audit
Cooling unit control by electronic

ENGLISH

www.supervending.ru по вопросам приобретения оборудования звоните 8-499-409-8145

FUNCTION OF THE SELECTION BUTTON

Selection Nr. 1 — back — Abort or escape a programming point

Selection Nr. 2 — up — Increase or next programming point by pushing selection button2

Selection Nr. 3 — down — Decrease or previous programming point by pushing selection button 3

Selection Nr. 4 — Enter / Store — Call or store a programming point by pushing selection button4

Selection Nr.: 5 — Price set to zero

Selection Nr.: 6 — Not used

Selection Nr.: 7 — Not used

Password 4-2-3-1-4

Entry by selection button

4 = key 4
2 = key 2
3 = key 3
1 = key 1

ENGLISH

www.supervending.ru по вопросам приобретения оборудования звоните 8-499-409-8145

SuperVending

SERVICE ROUTINE

In the service mode, information such as sales by selection, total sales, total cash flow through the machine, and diagnostic error codes can be accessed by using the selection buttons and the electronic display. In addition, storage column assignments and vend pricing can be set in this mode using the same techniques. The service mode can only be entered when the vendor door is open and when the service mode switch is activated (place in the middle of the electronic board).

The first four vendor selection switches are used to step through the various programming functions. To do this each of these selection switches is given a specific function:

Selection Switch 1	HOME	(means Escape, Cancel, Abort)
Selection Switch 2	UP	(means Increase, Next)
Selection Switch 3	DOWN	(means Decrease, Previous)
Selection Switch 4	ENTER	(means OK, Accept, Enter, Save)

After entry into the service mode the operator can select one of several routines to read data registers or to program machine configuration information. This level is called the code level. Each of these paths is identified by a service code. The code for the various paths are as follows

Eror Error routine
CPo Coin Payout Routine
tUFL Tube Fill Routine
tESt Test Vend Routine
PASS Required a password to access on the protected menu

Protected menu

- **CASH** Cash counter routine
- **SALE** Sales counter routine
- **PriC** Prices setting routine
- **StS** Spaces to sales setting routine
- **Con** Machine configuration setting routine
- **CCOC** Overpay routine
- **PrEU** Preview vend password setting
- **LanG** Language selection
- **TinE** Time and data routine
- **Lit** Light control routine
- **rFrG** Refrigeration control routine
- **dISC** Discount control routine
- **SdEP** Vending mechanism depth control
- **dUdIP** Daily Vend inhibited period
- **rtn** Return to unprotected menu

rtn Return to normal mode door open state

The password is the sequence of selection 4-2-3-1. The purpose of this password is to prevent accidental reprogramming by the operator.

ENGLISH

www.supervending.ru по вопросам приобретения оборудования звоните 8-499-409-8145

ERROR ROUTINE

If the ENTER button is activated at the **"Eror"** prompt the VMC will enter in the error routine. If no errors have occurred since the last error reset the display will show a **"nonE"** message. If an error has been detected since the last error reset the display will show the first summary level error code that has occurred, such as **"COLJ"**, which would indicate a column jam error. Using the UP or DOWN buttons will cycle through the various summary level error. On the appendix A (Map of internal menu) you find all the error that the machine can generate.

Activation of the HOME button while summary level error code is displayed will return the VMC to the **"Eror"** prompt.

Activation of the HOME button at **"Eror "** prompt returns the VMC to the normal mode door open state.

The most common errors are :

VEnd	Vend Mechanism
door	Door open
SELS	Selection Switch
CHAr	Changer
ACCE	Changer Acceptor
Chut	Chute/Carrier Switch
STS	Space to sales programming
bUAL	Bill Validator
Crdr	Card reader
rFrG	Cooling unit

COLUMN JAM ERROR ROUTINE

If the ENTER button is activated at the **"VEnD"** prompt the VMC will display a **"CJXX"** message where XX indicates the columns that have been detected as being jammed.

Using the UP and DOWN buttons will cycle through all jammed columns. If the ENTER button is pressed and held for two seconds during the display of any error code, that code will be cleared.

After clearing, VMC will display the next existing column jam error, or **"nonE"** if no other error.

Activation of HOME button will return the VMC to the code level at the **"Eror"** message.

DOOR SWITCH ERROR ROUTINE

If the ENTER button is activated at the **"door"** prompt the VMC will display a **"dS"** message indicating a door switch error was detected (door open for more than one hour). If the ENTER button is pressed and held for two seconds during the display of any error code, that code will be cleared.

After clearing VMC will display the next existing error or **"nonE"** if no other error.

Activation of HOME button will return the VMC to the code level at the **"Eror"** message.

www.supervending.ru по вопросам приобретения оборудования звоните 8-499-409-8145

SuperVending

SELECTION SWITCH ERROR ROUTINE

If the ENTER button is activated at the **"SEL"** prompt the VMC will display a **"SLXX"** message where **"XX"** indicates the first selection switch error (switch always close). Using the UP and DOWN buttons will cycle through all selection switch error. If the ENTER button is pressed and held for two seconds during the display of any error code , that code will be cleared.

After clearing VMC will display the next existing error, or **"nonE"** if no other error.

Activation of HOME button will return the VMC to the code level at the **"Eror"** message.

CHANGER ERROR ROUTINE

If the ENTER button is activated at the **"CHAr"** prompt the VMC will display a **"CC"** message indicating a changer communication error a **"tS"** message indicating a tube sensor error, an "IC" message indicating an Inlet chute blocked error (no coins sensed in the acceptor for a supplier pre-determined number of hours, a **"tJ"** message indicating a tube jam error, or a "CRCH" message indicating a changer ROM checksum error. Using the UP and DOWN buttons will cycle through all changer error. If the ENTER button is pressed and held for two seconds during the display of any error code, that code will be cleared.

After clearing VMC will display the next existing error, or **"nonE"** if no other error.

Activation of HOME button will return the VMC to the code level at the "Eror" message.

ACCEPTOR ERROR ROUTINE

If the ENTER button is activated at the **"ACCE"** prompt the VMC will display a **"EE"** message indicating excessive escrow attempts (escrow to vends greater than a pre-determined supplier standard), and **"nJ"** message indicating a coin jam (sensed and reported by coin mechanism), or a **"LA"** message indicating a low acceptance rate. Using the UP or DOWN buttons will cycle through all acceptor errors. If the ENTER button is pressed and held for two seconds during the display of any error code , that code will be cleared.

After clearing VMC will display the next existing error, or "nonE" if no other error.

Activation of HOME button will return the VMC to the code level at the "Eror" message.

CHUTE SENSOR ERROR ROUTINE

If the ENTER button is activated at the **"CHut"** prompt the VMC will display a **"CS"** message indicating a chute sensor error. If the ENTER button is pressed and held for two seconds during the **"CS"** error code, that code will be cleared.

After clearing VMC will display the next error, or **"nonE"** if no other error.

Activation of HOME button will return the VMC to the code level at the **"Eror"** message.

www.supervending.ru по вопросам приобретения оборудования звоните 8-499-409-8145

BILL VALIDATOR ERROR ROUTINE

If the ENTER button is activated at the **"bUAL"** prompt the VMC will display a **"bC"** message indicating a bill validator communication error, a **"bFul"** message indicating that the bill stacker is full, a **"biLL"** message indicating a defective motor, a **"bj"** message indicating that there is a bill jammed in the bill validator, a **"brCH"** message indicating a checksum error, a **"bOPn"** message indicating an open cash box, or a **"bS"** message indicating a bill sensor error. The first column that has been detected with a home sense error. Using the UP or DOWN buttons will cycle through all bill validators errors. If the ENTER button is pressed and held for two seconds during the display of any error code that code will be cleared.

After clearing VMC will display the next existing error, or **"nonE"** if no other error.

Activation of HOME button will return the VMC to the code level at the **"Eror"** message.

COOLING UNIT ERROR ROUTINE

If the ENTER button is activated at the **"rFrG"** prompt the VMC will display a **"SEnS"** message indicating probe failure .The message **"COLd"** indicating than the temperature is lower the 1,5 C° lower than the setpoint . The message **" HOT"** indicating than the temperature is 1,5 °C higher than the setpoint .

The message **" CnPr"** indicating than the temperature did not fall down of more than 0.5 °C during the last hour .

The message **" Htr"** indicating than the temperature did not increase of more than 0.5 °C during the last hour .

IMPORTANT : AFTER "POWER ON", THE COMPRESSOR HAS A START DELAY OF 3 MINUTES

Using the UP or DOWN buttons will cycle through all cooling unit errors. If the ENTER button is pressed and held for two seconds during the display of any error code that code will be cleared.

After clearing VMC will display the next existing error, or **"nonE"** if no other error.

Activation of HOME button will return the VMC to the code level at the **"Eror"** message.

COIN PAYOUT ROUTINE

If the ENTER button is activated at the **"CPO"** prompt the VMC will enter the coin payout routine. Upon entry into this routine the display will show the lowest coin value dispensable. Pressing the UP button will increase the display to the next highest coin value, the DOWN will decrease to the next lowest coin values. When the changer has only 3 tubes, the fourth value will display to 0, means don 't exist the fourth tube.

Pushing the button number 5 to a corresponding coin value the display will show the number of coins in the tube reported by the changer .

Pressing the ENTER button will pay out the displayed coin type. Activation of the HOME button while a coin value is displayed will return the VMC to the **"CPO"** prompt.

Activation of the HOME button at the **"CPO"** prompt returns the VMC to the " normal mode door open state.

ENGLISH

www.supervending.ru по вопросам приобретения оборудования звоните 8-499-409-8145

SuperVending

TUBE FILL ROUTINE

If the ENTER button is activated at the **"tUFL"** prompt the VMC will enter the tube fill routine

The purpose of this routine is to allow the operator to fill the tubes by entering them through the acceptor and thus have total coin accountability, if they so choose.

Upon entry into this routine the VMC will enable acceptance of any coin type that will be routed to an inventory tube and disable all others.

The VMC will count and display all inventoried coins and will not disable the acceptor from taking coins when the highest price setting is reached.

Activation of HOME button while a coin inventory is displayed will return the VMC to the **"tUFL"** prompt. Activation of the HOME button at the **"tUFL"** prompt returns the VMC to the normal mode door open state

TEST VEND ROUTINE

If the ENTER button is activated at the **"tESt"** prompt the VMC will enter the test vend routine.

Upon entry into this routine the display will show the first test routine **" UEnd "** the description of the test routine available are the follows:

- **" Uend "** to test the vend motor
- **" SL"** to test selection switch
- **" So"** to test Sold out switch
- **" dSP"** to test 5 digit display
- **" rELY"** to test relays output (compressor, heater, light.)
- **"Temp"** to test the temperature sensor

" Uend "

Activation of the ENTER button (at the **" Uend "** routine) will show the column number **"C01"** activation of the enter button will perform the vending test for selected column, using the up or down button will change the column number. **Vends made on this routine will not increase the vend counters.** Activation of the HOME button while a column is displayed will return the VMC to the **" Uend "** prompt.

Activation of the HOME button at the **" Uend "** prompt will return to **"tESt"** prompt

" SL"

Activation of the ENTER button (at the **" SL"** routine) will show the last selection button pressed **"SEY"** where Y is the number of the selection. Use this routine to test all the selection switch. To come back to the **"tESt"** menu, keep pressed the first selection for two seconds.

ENGLISH

www.supervending.ru по вопросам приобретения оборудования звоните 8-499-409-8145

"SO"

Activation of the ENTER button (at the "**SO**" routine) will show the sold out status of the selected column, "**C** *XXY*" where *XX* is the column number (you can choose the column using up or down button) and *Y* is the sold-out state (0=column is not sold out, 1=column is sold out). Press escape button to come back to the "**tESt**" menu.

"**dSP**"

Activation of the ENTER button (at the "**dSP**" routine) will test all the vertical and horizontal segment of the 5 digit display. Press escape button to come back to the "**tESt**" menu.

"**rELY**"

Activation of the ENTER button (at the "**rELY**" routine) will start the relay test , the display show the first relay name and the status(*X*) "**CnP***X*" press enter button to toggle the status of the relay (*X*=0 off, *X*=1 on) you can choose a different relay pressing up or down, the relay name are:

- "**CnP***X*" refrigerant system relay
- "**FAn***X*" Evaporator fan
- "**Lit***X*" Light relay
- "**Htr***X*" Heater relay (optional Kit)
-

"tEmp"

Activation of the ENTER button (at the "**tEmp**" routine) will display the temperature of the detect by the sensor .If error is dedected on the sensor the display will show **"SenS".**

Press escape button to come back to the "**tESt**" menu.

PASS ROUTINE

This routine is used to access at the protected menu.

At the "**PASS**" prompt press enter button, the display show "nothing" press the follow sequence of selection button 4-2-3-1 (password must be entered in 10 seconds) press enter to confirm (selection 4) now you can see the first protected menu "**CASH**" (use up and down button to cycle on the available menu).

CASH COUNTER ROUTINE (PROTECTED MENU)

If the ENTER button is activated at the "**CASH**" prompt the VMC will enter the cash counter routine. Upon entry into this routine the display will show a "**CASH**" / "**XXXX**" / "**XXXX**" message where "**XXXX**" characters are the historical total cash counters due to vends that have been recorded by the VMC.

The first quartet "**XXXX**" is the highest digit and the 2th "**XXXX-**" is the lowest.

www.supervending.ru по вопросам приобретения оборудования звоните 8-499-409-8145

Using the UP and DOWN button at this point will change the display to "**CA n**" / "**-XXXX**" / "**XXXX-**" where **n** is a selection number and "**XXXX**" are the cash counter for that selection.

Using the UP and DOWN buttons will cycle through the available selections cash counters.

Activation of the HOME button while a selection counter is displayed will return the VMC to the "**CASH**" prompt.

Activation of the HOME button at the "**CASH**" prompt will return the VMC to unprotect area.

SALES COUNTER ROUTINE (PROTECTED MENU)

If the ENTER button is activated at the "**SALE**" prompt the VMC will enter the sales counter routine. Upon entry into this routine the display will show a "**SALE**" "**-XXXX**", "**XXXX-**" message where "**XXXX**" characters are the historical total sale counters due to vends that have been recorded by the VMC.

The 1th "**XXXX**" are the highest digits and the 2th "**XXXX-**" are the lowest.

Using the UP and DOWN button at this point will change the display to "**SL n**" / "**-XXXX**" / "**XXXX-**" where **n** is a selection number and "**XXXX**" are the sales counter for that selection.

Using the UP and DOWN buttons will cycle through the available selections sales counters.

Activation of the HOME button while a selection counter is displayed will return the VMC to the "**SALE**" prompt.

Activation of the HOME button at the "**SALE**" prompt will return the VMC to unprotect area.

PRICE SETTING ROUTINE (PROTECTED MENU)

If the ENTER button is activated at the "**PrIC**" prompt the VMC will enter the price setting routine. The display will show a "**Pr 1**", if the machine is working in multi-price, or "**SPrI**" if it's work in in single price.

In multi-price mode you can choose different price for each selection; using UP and DOWN buttons will cycle through available selection (**Pr1 - Pr12**) or "**ALL**". "**ALL**" is used to change the price for al selection. Activation of the ENTER button will show the actual price using UP and DOWN button will increase or decrease the price by one lowest coin value respectively.

Activatron of the ENTER button while the desired price is displayed will save that price Activation of the HOME button while a selection price is displayed. without doing an ENTER before will return the VMC to the selection display without saving the displayed selection price.

In single price the price that you choose on "**SPrI**" submenu, is used for all selection.

Activation of the HOME button while a selection is displayed will return the VMC to the "**PrIC**" prompt. Activation of the HOME button returns the VMC to unprotected area

www.supervending.ru по вопросам приобретения оборудования звоните 8-499-409-8145

SPACE TO SALES SETTING ROUTINE (PROTECTED MENU)
The VMC feature allow the ability to assign for each selection button one or more column.

If the ENTER button is activated at the "**StOS**" prompt the VMC will show "**OPt1**". The "**OPt1**" menu is a pre-programmed configuration (see Figure 1) for the space to sale routine, actually we have 6 pre-programmed configuration

Pre-Programmed Space to Sale (opt7-8 from v2.06)

OPT	SELECTIONS 1	2	3	4	5	6	7	8	9	10	11	12	13
1	1	1	2	2	3	4	5	6	7	8	9	10	None
2	1	1	2	2	3	3	4	5	6	7	8	9	None
3	1	1	2	2	3	4	5	6	7	None	None	None	None
4	1	1	2	3	4	5	6	7	8	None	None	None	None
5	1,2,3	1,2,3	1,2,3	1,2,3	4	4	5	5	6	6	7	8	None
6	1	2	3	4	5	6	7	8	9	10	None	None	None
7	1,2	1,2	1,2	1,2	3,4	3,4	3,4	3,4	5	6	7	8	None
8	1,2,3	1,2,3	1,2,3	1,2,3	4	4	4	4	5	5	7	8	None

COLUMNS

Figure 1

If you want to create a personal profile you can use the "**CStS**" (custom space to sale) submenu. When you press enter the display show the actual assignment of the first selection (the display will show alternative " **SL 1**" and " ***CXX*** " (or "**none**" if no column is assigned to the selection) where ***XX*** is the number of column). Using the button up or down will increase or decrease the selection number. To change the assignment press the enter button on the select selection, the display will show " **C01 *X*** " (where ***X*** is 0-unselected, 1-selected), pressing up or down change the column number, pressing the enter button you will be able to change the select status ***X*** (0-unselected, 1-selected). In the same way you can change all the assignment for each selection. After the last selection you will find a function called "**SAUE**" if you press enter at this function all the change that you have made will be saved. If you go out of the "**StoS**" Routine without confirm with "**SAUE**" function (using home button) all the change will be lost.

MACHINE CONFIGURATION SETTING ROUTINE (PROTECTED MENU)
If the ENTER button is activated at the "**Con**" prompt the VMC will enter the machine configuration setting routine. The display will show a "**C1**" message where the "**1**" indicates configuration setting number 1. Using UP and DOWN button will cycle through the available configuration setting numbers. Activation of the ENTER button while a configuration setting number is displayed will allow access to the current setting number of the displayed configuration setting.

www.supervending.ru по вопросам приобретения оборудования звоните 8-499-409-8145

SuperVending

Activation of the ENTER button will save the displayed configuration.
Activation of the HOME button while configuration is displayed, without doing an ENTER before, will return the VMC to the "**Con**" display without saving the displayed configuration. Activation of the HOME button returns to unprotected area.

THE FOLLOWING INFORMATION'S DESCRIBES VARIOUS MACHINE CONFIGURATION SETTINGS

C1 SINGLE PRICE/MULTI PRICE

This setting is used to enable the single price mode. In this mode, all selection prices are set to the same price:

- C1 = 0 Single price mode (default).
- C1 = 1 Multi price mode

C2 OPTIONAL FEATURES

This parameter enable or disable optional program menu:

- C2 = 0 Extended menu off (default)
- C2 = 1 Extended menu on.

C3 DISPLAY MESSAGE MODE

This parameter is used to enable/disable the POS message:

- C3 = 0 Display message on (default)
- C3 = 1 Display message off.

C4 OPEN DOOR DISPLAY MODE

This parameter is used to change the MIS data information that you can read when the door of VMC is open:

- C4 = 0 Display only the Existing Error or nonE (default)
- C4 = 1 Display total Sales, total Cash and Existing Error or nonE.

C5 RESET COUNTER MODE

This parameter determines how the VMC have to reset the MIS internal counter:

- C5 = 0 All the re-settable counter will be reset only using a reset command on MIS communication mode (default).
- C5 = 1 All the re-settable counter will be reset when you open the door , read one of the re-settable counter and close the door.

C6 RESERVED FOR FUTURE USE

C7 SAVE CREDIT MODE

www.supervending.ru по вопросам приобретения оборудования звоните 8-499-409-8145

This parameter determines how the VMC have to manage the credit::

- C7 = 0 Clear the credit if nothing happen in the last five minutes (default)
- C7 = 1 Keep the credit indefinitely.

C8 FORCE VEND

This parameter is used to prevents the use of the machine like a coin changer. When forced vend is enable you can obtain escrow only in this cases:

- if you insert money and make a selection (full or empty selection is the same)
- if you put coin that you can obtain like escrow (coins that go in the tube of the coinage) and you don't reach the maximum price.
- C8 = 0 Force vend disable (default).
- C8 = 1 Force vend enable.

C9 MULTI VEND

This parameter enable or disable automatic escrow process:

- C9 = 0 Multi Vend disable (you obtain automatically the escrow after the selection) (default)
- C9 = 1 Multi Vend enable (you can use your escrow to make another selection, or if you want escrow, you have to press the escrow button)

C10 BILL ESCROW MODE

This parameters allows the escrow of bill. If enabled and the last bill inserted takes the credit over the maximum price, the bill be held in the escrow position, and can be returned as escrow. If the function is disabled, bills go always to the stacker. The valid value are:

- C10 = 0 Bill escrow enabled (default)
- C10 = 1 Bill escrow disabled.

C11 TYPE MACHINE

This parameters define the kind of machine for special setting like central Soldout led instead of separate led .

- C11 = 0 D door machine separate soldout led
- C11 = 1 Modular door machine. Central soldout led using led column 1.

C12 COOLING UNIT CONTROL MODE

This parameters enable the electronic control of cooling unit. The valid value are:

- C12 = 0 Cooling unit electronic control enabled (default)

C12 = 1 Cooling unit electronic control disabled. (for manual thermostat)

www.supervending.ru по вопросам приобретения оборудования звоните 8-499-409-8145

CORRECT CHANGE ONLY CONTROL (protected menu)

CORRECT CHANGE RULE

IF IN CCOC CON=0 (means the VMC manage automatically the changer setting)

CCU corect change value

If (changer is able to change back (CCU value ≥ Maximum Price))correct change led is OFF

Else correct change led if ON

If correct change led is ON or is OFF the VMC automatically accept only coins than can be return or can return the equivalent credit with other coins.

ACC (Unconditional acceptance value) is automatically managed equal to the Maximum price

IF IN CCOC CON=1 (means the VMC manage the changer setting according to CONFY setting)

Correct change led is set regarding the C2 (Low change equation) and C3 (minimun coins Tube level)

If correct change is OFF VMC accept coins set in C06 and C07

If correct change is ON VMC accept coins set in C08 and C09

ACC (Unconditional acceptance value) is automatically managed equal to the Maximum price

If the ENTER button is activated at the "**CCOC**" prompt the VMC will show the actual overpay status ""**ConX**", where X is 0(overpay not allowed) or 1(overpay

allowed), use up or down button to select the other submenu available ("**CCU**", "**ACC**" and "**ConF**"), or press enter button to change X value.

- "**CCU**" if you press enter at the "**CCU**" prompt, the display show the actual maximum value used by VMC to work in correct change situation. you can change the value using up or down button.
- "**ACC**" if you press enter at the "**ACC**" prompt. the display show the actual maximum value accepted, even if the VMC doesn't know if it has the change, you can change the value using up or down button
- "**ConFY**" (this menu, and submenu, are used by VMC only if overpay is allowed) if you press enter at the "**ConFY**" prompt, the display show"**C1**", using up or down button you can choose the other submenu ("**C1**"-"**C10**"), which have this function:

www.supervending.ru по вопросам приобретения оборудования звоните 8-499-409-8145

"ConF"

"C1" KEYPAD ACTIVATION (COINAGE)
C1 = 0 (OFF) C1 = 1 (ON)

"C2" LOW CHANGE EQUATION

This parameter defines the exact change equation. The combination of the empty states assume the exact change state

A is the lowest coin value reported in the tubes

D is the highest coin value reported in the tubes

If the tubes are empty according to these equations the CORRECT CHANGE led is ON

0 : TUBE A and TUBE B and TUBE C and TUBE D
1 : TUBE A or TUBE B or TUBE C
2 : TUBE A only
3 : TUBE B only
4 : TUBE C only
5 : TUBE D only
6 . TUBE B or TUBE C or TUBE D
7 : TUBE A and TUBE B or TUBE C
8 : TUBE A and TUBE B or TUBE D
9 : TUBE A and TUBE C or TUBE D
10 : TUBE B and TUBE C or TUBE D
11 : TUBE A and TUBE D or TUBE C
12 : TUBE B and TUBE D or TUBE A
13 : TUBE A or TUBE C
14 : TUBE A or TUBE B and TUBE C
15 : TUBE A or TUBE B

ATTENTION: When useing executive please be aware to set into the programming menue "ConF" C2 and C3 to zero otherwise machine is working at "Price holding"

"C3" LOW CHANGE LEVEL

This number will be deducted to the coins tubes number reported by the changer in order to calculate according to the low change equation the CORRECT CHANGE status

"C4" BILL ACCEPTED (EQUAL TO "C6" AND "C7")

Bill to accept when "CORRECT CHANGE" is OFF

"C5" BILL ACCEPTED IN LOW CHANGE CONDITION
(EQUAL TO "C7" AND "C8")
Bill to accept when "CORRECT CHANGE" is ON

www.supervending.ru по вопросам приобретения оборудования звоните 8-499-409-8145

"C6","C7" This parameter is used for determining the 16 accepted coins by the changer.

Coin 1 is assumed to be the smallest coin, and coin 16 the highest.
C6 = coins 1 to 8

C7 = coins 9 to 16

Each coin has a binary value as

In C6	coin 1	=	1	In C7	coin 9	=	1
	coin 2	=	2		coin 10	=	2
	coin 3	=	4		coin 11	=	4
	coin 4	=	8		coin 12	=	8
	coin 5	=	16		coin 13	=	16
	coin 6	=	32		coin 14	=	32
	coin 7	=	64		coin 15	=	64
	coin 8	=	128		coin 16	=	128

EXAMPLE: If you want to accept coin 1 – 2 – 3 – 4 –13 – 15 you must add the correspondent values

C6 = 1 + 2 + 4 + 8 = 15

C7 = 16 + 64 = 80

"C8","C9" This parameter is used for determining the 16 accepted coins by the changer, **when the VMC is in low change condition**. The value of this submenu are calculated on the same way like "C6","C7" submenu.

C10 RESET TO THE FACTORY (DEFAULT VALUE)

Be careful using this option you lose all the configuration parameters on the machine and reset all the counters (also the total counter).

AVAILABLE RESET OPTION			SPACE TO SALES OPTION
"C10"	=	18 / 2D	Option 1
"C10"	=	19 / 1D	Option 1
"C10"	=	20 / 2D	Option 1
"C10"	=	21 / 4D	Option 1
"C10"	=	22 / 2D	Option 6
"C10"	=	23 / 4D	Option 6

Put value **option** on the **ConFY** "C10" submenu and press button 4 to confirm.
Turn off the machine: Press and keep pressed the button on the board and turn on the machine waiting until the end of initialisation of the board (when you read message "RESET" on the display). Release the button on the board.
Now you have to reprogram all parameters.

PREVIEW VEND PASSWORD SETTING MODE (PROTECTED MENU)

www.supervending.ru по вопросам приобретения оборудования звоните 8-499-409-8145

If ENTER button is activated at the "PrEU" prompt the VMC will show the actual password for preview function of VMC. The first number of the digit will be flashing, using up or down, you can change the value, pressing enter button will go to the next digit. Press enter on the last digit to confirm the new password, or press escape to exit without saving.
The preview function allow the customer to see the MIS data with the door close. The correct password must be inserted in 10 seconds when the door is closed, on that way you can show the cash and the sale menu, after 5 minutes, if no button is pressed, the VMC return on vending mode.

LANGUAGE CONFIGURATION (PROTECTED MENU)

If ENTER button is activated at the "LAnG" prompt the VMC will show the actual language used by VMC, using up or down to toggle through the available language:

- "EnG" English
- "Frn" French
- "GEr" German
- "ItA" Italian
- "Port" Portuguese
- "ESP" Spanish
- "SLO" Slovene

Press enter to confirm the new language or escape to come back on the "LAnG" prompt.

TIME CONFIGURATION (PROTECTED MENU)

If ENTER button is activated at the "tInE" prompt the VMC will enter the machine on the time setting routine with the follow submenu :

- "Enb*X*" time status (X=0 time disable, X=1 time enable), press enter to modify X value,
- "YEAr" press enter show actual year, up down modify the value, enter to confirm, home to come back at "EnbX" message,
- "nth" press enter show actual month, up down modify the value, enter to confirm, home to come back at "EnbX" message,
- "dAtE" press enter show actual date, up down modify the value, enter to confirm, home to come back at "EnbX" message,
- "Hour" press enter show actual hours-minutes, up down modify the value hours, enter to blanking minutes up or down to modify minutes, enter to confirm, home to come back at "EnbX" message,
- " dSt "daylight saving time, press enter to modify the country, the available value are:
  - " AUS " Australian rules
  - " EU " European rules
  - " NA " North America rules
  - " OFF " no saving time

www.supervending.ru по вопросам приобретения оборудования звоните 8-499-409-8145

LIGHT CONTROL (PROTECTED MENU)

If ENTER button is activated at the "LIt" prompt the VMC wil enter the machine on the light control routine with the follow submenu :

- "Enb *X* " Used to enable (X=1) or disable (X=0) the light control,
- "Strt" Set the start time using the follow submenu:
  - "dAY" select the days of the week for start function, press enter to cycle through the days, press enter to change the status of the day (0 =not selected, 1= selected)
  - "Hour" press enter to change the start hour and minute for selected day
- "StoP" Set the stop time using the follow submenu:
  - "dAY" select the days of the week for stop function, press enter to cycle through the days, press enter to change the status of the day (0 =not selected, 1= selected)
  - "Hour" press enter to change the stop hour and minute for selected day.
  - "VDSTP" light off during Vend stop period ,if in Enbx x=1then the lights are turned off during vend stop period if x =0 lights still on during vend stop period.

TEMPERATURE CONTROL (PROTECTED MENU)

If ENTER button is activated at the "rFrG" prompt the VMC will enter the machine on the temperature control routine with the follow submenu :

- "Enb *X* " Used to enable (X=1) or disable (X=0) the temperature time control,
- "Strt" Set the start time using the follow submenu:

  "dAY" select the days of the week for start function, press enter to cycle through the days, press enter to change the status of the day (0 =not selected, 1= selected)

  "Hour" press enter to change the start hour and minute for selected day.
- "StoP" Set the stop time using the follow submenu:

  "dAY" select the days of the week for stop function, press enter to cycle through the days, press enter to change the status of the day (0 =not selected, 1= selected)

  "Hour" press enter to change the stop hour and minute for selected day.
- "dEG*X*" Set the temperature scale (where *X*=C for Celsius degree, *X*=F for Fahrenheit).
- "SEtp" Set point setting, press enter to change set point for refrigerant system (note the value is expressed in °C, or °F acccrding to "dEG" configuration), the default value is 1.5 °C (35°F).
- "Stor" Storage temperature setting, press enter to change temperature setting (note the value is expressed in °C, or °F according to "dEG" configuration), the default value is 15.5 °C (60°F).

www.supervending.ru по вопросам приобретения оборудования звоните 8-499-409-8145

- "**dSP***X*" Enable or disable the temperature display. If you set *X* = 1 (enable) the VMC will show the temperature after the POS message. The default value is 0 (disable).

DISCOUNT SETTINGMODE (PROTECTED MENU) (EXTENDED MENU)

If ENTER button is activated at the "**dISC**" prompt the VMC will enter the machine on the discount control routine with the follow submenu :

- "**Enb** *X* " Used to enable (X=1) or disable (X=0) the discount setting,
- "**Strt**" Set the start time using the follow submenu:

  "**dAY**" select the days of the week for start function, press enter to cycle through the days, press enter to change the status of the day (0 =not selected, 1= selected)

  "**Hour**" press enter to change the start hour and minute for selected day.
- "**StoP**" Set the stop time using the follow submenu:

  "**dAY**" select the days of the week for stop function, press enter to cycle through the days, press enter to change the status of the day (0 =not selected, 1= selected)

  "**Hour**" press enter to change the stop hour and minute for selected day.
- "**SEL** nn *X*" Set the Selection (nn = number of selection) that are eneable to the discount (X = 0 disable, X = 1 enable), or "**ALL** *X*" for all selections,
- "**LESS**" Set the amount of the discount for the selected selections.

VENDING DEPTH CONTROL (PROTECTED MENU) (EXTENDED MENU)

If the ENTER button is activated at the "**SdEP**" prompt the VMC will enter on the depth control routine, showing the column number and the depth status.

EXAMPLE: "**01 4**" means column n°1 has four product each rows (4 depth)

You can change for each column the depth value (valid value are: 1,2,3,4; actually 3 work like 4).

ATTENTION: AT MODEL 680 MD-7 WITH SEVEN WIDE COLUMNS SET VENDING DEPTH CONTROL TO 4 AND SET THE DEPTH MODE BY ADJUSTING THE MOTOR CAM.

www.supervending.ru по вопросам приобретения оборудования звоните 8-499-409-8145

SuperVending

DAILY VEND INHIBITED PERIOD (PROTECTED MENU) (FROM V2.08) (EXTENDED MENU)

If ENTER button is activated at the "**dUdIP**" prompt the VMC will enter the machine on the daily vend inhibited period control routine with the follow submenu :

- "**Enb** *X* " Used to enable (X=1) or disable (X=0) the inhibited period function,
- "**Strt1**" Set the start time (HH mm) of the first inhibited period of the day
- "**StoP1**" Set the stop time (HH mm) of the first inhibited period of the day
- "**Strt2**" Set the start time (HH mm) of the second inhibited period of the day
- "**StoP2**" Set the stop time (HH mm) of the second inhibited period of the day
- "**Strt3**" Set the start time (HH mm) of the third inhibited period of the day
- "**StoP3**" Set the stop time (HH mm) of the third inhibited period of the day
- "**Strt4**" Set the start time (HH mm) of the fourth inhibited period of the day
- "**StoP4**" Set the stop time (HH mm) of the fourth inhibited period of the day
- "**Strt5**" Set the start time (HH mm) of the fifth inhibited period of the day
- "**StoP5**" Set the stop time (HH mm) of the fifth inhibited period of the day
- "**Strt6**" Set the start time (HH mm) of the 6th inhibited period of the day
- "**StoP6**" Set the stop time (HH mm) of the 6th inhibited period of the day

During this period the vend is stopped and the VMC show the message "NO VEND UNTIL hh:mm", using the "**VDSTP**" function on "**LIT**" submenu you can turn off the light during the Inhibited period

RETURN TO OPEN DOOR MODE

If the ENTER button is activated at the "**rtn**" prompt the VMC will exit to normal open door routine

ENGLISH

www.supervending.ru по вопросам приобретения оборудования звоните 8-499-409-8145

APPENDIX A

PROGRAMMING DIAGRAM

MAIN MENU	1 st SUB MENU	2 nd SUB MENU	3 rd SUB MENU	4 th SUB MENU	DESCRIPTION
Error					Error routine
	NonE				No errors exits
	Uend				Vend mechanism summary error
		CJXX			Column jam in column XX (00 - nn)
	Ctrl				Control system summary error
		DS			Door switch
		Ra[an]			RAM check sum of service mode settings
		AC[CLO]			AC supply low
		SF			Scale factor incompatibility
		IS			Machine inlet chute sensor is blocked
		Ib			Machine inlet chute is blocked
	SEL				Selection switch summary error
		SLXX			Selection switch error in switch XX (01 - 12)
	StS				Space to sales summary error
		UAXX			Unassigned column for column XX
	CHAr				Changer summary error
		CC			Changer communication error
		TS			Tube sense error
		IC			Changer inlet chute blocked
		TJXX			Tube pay out jam in coin type XX
		Cr[CH]			Changer ROM check sum
		EE			Excessive escrow attempts
		NJ			Coin jam
		LA			Low acceptance rate
		DiS			Disconnected acceptor
		Ro[n.1]			Coin routing error
	BUAL				Bill validator summary error
		BC			Bill validator communication error
		BF[UL]			Bill validator stacker full
		Bi[LL]			Defective bill validator motor
		BJ			Bill validator jammed
		Br[CH]			Bill validator ROM check sum error
		BC[Pn]			Bill validator stacker is open or out of position
		BS			Bill validator sensor error
	Crdr				Card reader summary error
		Cr[C]			Card reader communication error
		Cr[XY]			Card reader non-transient error; code X, sub-code Y
	RFrG				Refrigeration summary error
		Se[nS]			Temperature sensor defective or unplugged
		CC[Ld]			Cabinet temperature too cold
		Ho			Cabinet temperature too hot
		Cn[Pr]			Cooling system not cooling
		Htr			Heating system not heating
CPo					Coin Pay Out routine
	tube 1 4 value				Display coin value
	tube 1-4 value				Dispense coin while showing value

www.supervending.ru по вопросам приобретения оборудования звоните 8-499-409-8145

MAIN MENU	1 st SUB MENU	2 nd SUB MENU	3 rd SUB MENU	4 th SUB MENU	DESCRIPTION
tUFL					Tube Fill routine
	value on tube				Display tube count
tESt					Test routine
	Uend				Vend testing
		CO 1			
		...			1 – 12
		CO12			
	SL				Selection switch testing
		SL X			Where X is the selection number
	SO				Sold out testing
		C 1X			Display changing state
		...			1 – 12
		C12X			Display changing state
	DSP				Display testing

		||||			
	RELY				Relay testing
		CnPX			Compressor Display changing state (0/1)
		FAnX			Evaporator Display changing state (0/1)
		LitX			Light Display changing state (0/1)
		HtrX			Heater Display changing state (0/1)
	TEmP				Temperature Sensor Test
PASS					Password entry 10 seconds to enter 4-2-3-1-ENTER
	CASH				
		CASH			Cash counter display
			XXXX		Machine historical
		CA X			
			XXXX		Selection re-settable
	SALE				Product sales display
		SALE			
			XXXX		Machine historical
		COL X			
			XXXX		Selection re-settable
	PrIC				Price setting routine
		SPrI			If in single price
		Pr 1			If in multi price
		...			1 – 12
		Pr12			
		All			
			dd.cc		Edit price (00.00 - 99.99)
	StS				Space to sales routine
		OPt1			
		...			6 (min.) Preset options
		OPt6			
		CStS			Custom space to sales
			SL 1 - nn or nonE		Alternate selection number with columns currently assigned, or "nonE"
			...		1 – 12
			SL 12 - nn or nonE		Alternate selection number with columns currently assigned, or "nonE"
				Cnnx	Edit mode (0/1)
			SAUE		Save the current settings

www.supervending.ru по вопросам приобретения оборудования звоните 8-499-409-8145

ENGLISH

MAIN MENU	1 st SUB MENU	2 nd SUB MENU	3 rd SUB MENU	4 th SUB MENU	DESCRIPTION
	Con				Configuration menu
		C 1			0=single price – 1=multi price
		C 2			Optional Feature 0=disable 1=enable
		C 3			Display message 0=on 1=off
		C 4			Open door message 0=Error 1=counter & error
		C 5			Counter reset mode 0=after audit 1=after read Billing menu
		C 6			Reserved
		C 7			Save credit 0=clear after 5 min. 1=save unconditionally
		C 8			Force vend 0=disable 1=enable
		C 9			Multi vend 0=disable 1=enable
		C 10			Bill Escrow 0= enable 1= disable
		C 11			Machine Type 0=Ddoor 1=Modular door
		C 12			Temperature control 0=eletronic 1=thermostat
	CCOC				Correct change only control
		ConX			Allow consumer overpay routine
			Conx		Edit mode (0/1)
		CCU			Correct change Value
		ACC			Unconditional acceptance value
		ConFY			Custom coinage configuration
			C01		Reserved
			C02		Low change equation 0 to 14
			C03		Low change level
			C04		Accepted bills
			C05		Accepted bills in low change condition
			C06		Accepted coins 0-255
			C07		Accepted coins 0-255
			C08		Accepted coins in low change 0-255
			C09		Accepted coins in low change 0-255
			C10		Factory reset
	PrEU				Preview data password routine
		pppp			Edit four digit password
	LanG				Language selection routine
		EnG			
		...			Eng, Fin, GER, ITA, Port, ESP, SLO
		ESP			
	TinE				Time and date routine
		EnbX			Curren: setting
			Enbx		Edit mode (0/1)
		YEAr			Year setting
			yy		Edit year, 00 - 99 (Y2K)
		nth			Month setting
			mm		Edit month, 01 - 12
		dAtE			Date setting
			dd		Edit date, 01 - 31
		Hour			Hour and minute setting
			hhmm		Edit hour (00 - 24)
			hhmm		Edit minute (00 - 59)
		dSt			Daylight savings time code
			OFF		No daylight savings used
			AUS		Australian rules
			EU		European rules
			NA		North American rules

www.supervending.ru по вопросам приобретения оборудования звоните 8-499-409-8145

MAIN MENU	1 st SUB MENU	2 nd SUB MENU	3 rd SUB MENU	4 th SUB MENU	DESCRIPTION
	Lit				Lighting control routine
		EnbX			Enable Light time manage
			Enbx		X currente setting (0 disable/1 enable)
		StrT			Start light off period
			dAY		Start day setting
				nonX	
				...	non, tue, ued, thu, Fri, sat, Sun or ALL
				ALLX	Edit mode (0/1)
			Hour		Start hour and minute setting
				hhmm	Edit hour (00 - 24)
				hhmm	Edit minute (00 – 59)
		StoP			Stop light off period
			dAY		Stop day setting
				nonX	
				...	non, tue, ued, thu, Fri, sat, Sun, or ALL
				ALLX	Edit mode (0/1)
			Hour		Stop hour and minute setting
				hhmm	Edit hour (00 - 24)
				hhmm	Edit minute (00 – 59)
		VdStP			Vend Stop during light off period (0 disable 1 enable)
	RFrG				Refrigeration routine
		EnbX			Enable refrigerant controlled by time
			Enbx		X currente setting (0 disable/1 enable)
		Strt			Start refrigeration low performance period (using storage T)
			dAY		Start day setting
				nonX	
				...	non, tue, ued, thu, Fri, sat, Sun, or ALL
				ALLX	Edit mode (0/1)
			Hour		Start hour and minute setting
				hhmm	Edit hour (00 - 24)
				hhmm	Edit minute (00 - 59)
		StoP			Stop refrigeration low performance period (using storage T)
			dAY		Stop day setting
				nonX	
				...	non, tue, ued, thu, Fri, sat, Sun, or ALL
				ALLX	Edit mode (0/1)
			Hour		Stop hour and minute setting
				hhmm	Edit hour (00 - 24)
				hhmm	Edit minute (00 - 59)
		dEGX			Select Fahrenheit/Celsius
			dEGx		Edit mode (F/C)
		SEtP			Set point for normal operation
			tEtX		Edit set point temperature
		Stor			Storage temperature for low performance period
			tEtX		Edit storage temperature
		dSPX			POS temperature display enable
			dSPx		Edit mode (0/1)

www.supervending.ru по вопросам приобретения оборудования звоните 8-499-409-8145

MAIN MENU	1 st SUB MENU	2 nd SUB MENU	3 rd SUB MENU	4 th SUB MENU	DESCRIPTION
	dISC				Discount routine
		EnbX			Enable Discount setting
			Enbx		X currente setting (0 disable/1 enable)
		Strt			Start Discount period
			dAY		Start day setting
				nonX	
				...	non, tue, ued, thu, Fri, sat, Sun, or ALL
				ALLX	Edit mode (0/1)
			Hour		Start hour and minute setting
				hhmm	Edit hour (00 - 24)
				hhmm	Edit minute (00 - 59)
		StoP			Stop Discount period
			dAY		Stop day setting
				nonX	
				...	non, tue, ued, thu, Fri, sat, Sun, or ALL
				ALLX	Edit mode (0/1)
			Hour		Stop hour and minute setting
				hhmm	Edit hour (00 - 24)
				hhmm	Edit minute (00 - 59)
		SEL			Selection enabled for discount
			SEL 01-12 x		X= 1 enable x=0 disable
		LESS			Amount of discount
			dd.cc		Edit Amount (00.00 99.99)
	SdEP				Set column depth routine
		01 X			
		...			01-12
		12 X			Current setting
			12 x		Edit mode (0 - 4)
	dUdlP				Daily vend inhibited period
		Strt1			Start of 1st inhibit period
			hhmm		Hour -minute
		StoP1			Stop of 1st inhibit period
			hhmm		Hour -minute
		Strt2			Start of 2nd inhibit period
			hhmm		Hour -minute
		StoP2			Stop of 2nd inhibit period
			hhmm		Hour -minute
		Strt3			Start of 3rd inhibit period
			hhmm		Hour -minute
		StoP3			Stop of 3rd inhibit period
			hhmm		Hour -minute
		Strt4			Start of 4th inhibit period
			hhmm		Hour -minute
		StoP4			Stop of 4th inhibit period
			hhmm		Hour -minute
		Strt5			Start of 5th inhibit period
			hhmm		Hour -minute
		StoP5			Stop of 5th inhibit period
			hhmm		Hour -minute
		Strt6			Start of 6th inhibit period
			hhmm		Hour -minute
		StoP6			Stop of 6th inhibit period
			hhmm		Hour -minute
	Rtn				Return to sales mode

www.supervending.ru по вопросам приобретения оборудования звоните 8-499-409-8145

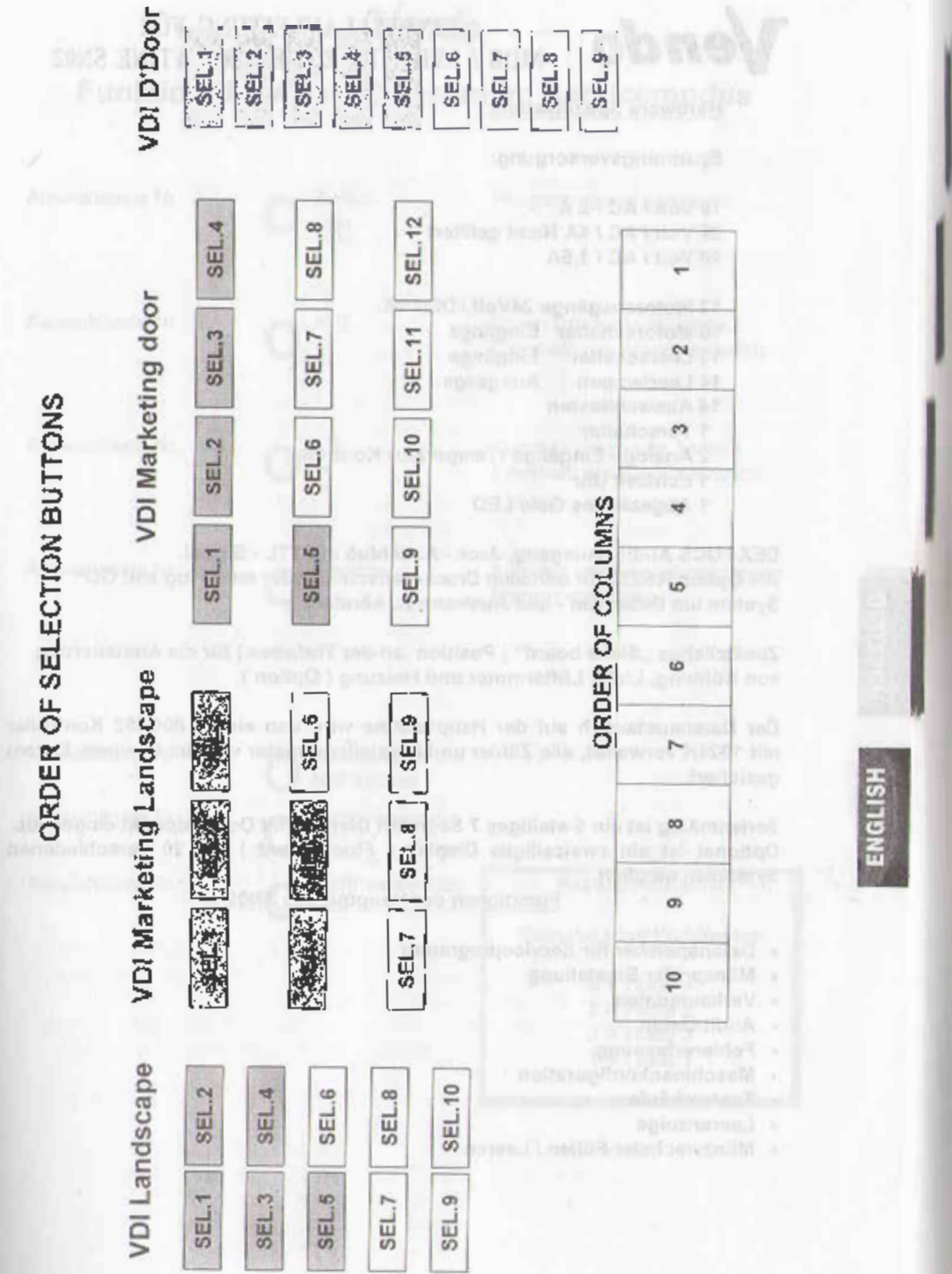

www.supervending.ru по вопросам приобретения оборудования звоните 8-499-409-8145

WARNING FOR A GOOD OPERATION OF VENDER

- DO NOT PLACE THE VENDING MACHINE IN THE DIRECT SUN LIGHT.
- DO NOT CLEAN VENDER WITH WATER SPOUTS. WASHING MUST ALWAYS BE DONE WITH THE MACHINE DISCONNECTED FROM POWER.
- IF AMBIENT TEMPERATURE IS ABOVE 32°C OR UNDER 0°C, ELECTRICAL PARTS MIGHT MALFUNCTION. ASK FOR SPECIAL KITS.
- DO NOT LEAVE THE VENDING MACHINE IN BAD WEATHER CONDITIONS.
- DO NOT PLACE VENDER CLOSE TO PIPE COUPLING OR WATERING SYSTEM
- IN CASE OF FAILURE OR MALFUNCTIONING, CONTACT OUR AFTER-SALES SERVICE. THE LIST OF CONTACT OFFICES IS AVAILABLE.
- DO NOT REMOVE ANY PROTECTION COVERS.
- ALLOWING AIR TO CIRCULATE FROM THE FRONT TO THE BACK OF THE VENDING MACHINE IS VERY IMPORTANT FOR THE COOLING UNIT.
- DO NOT TRY TO MODIFY THE ELECTRONIC BOARD SETTING.
- DO NOT TRY TO OPERATE THE VENDER WHEN THE DOOR IS OPEN.
- REFER TO THE "CARE AND CLEANING" CHAPTER FOR A GOOD MAINTENANCE.

EACH MACHINE IS PROVIDED WITH AN "INSTALLATION SURVEY" FORM (speciment on page 4) WHICH IS REQUESTED TO BE FILLED-IN. PLEASE SPEND FEW MINUTES TO DO IT, IT WILL BE A GREAT HELP FOR US TO IMPROVE THE VENDOR'S SERVICEABILITY AND CUSTOMER'S SATISFACTION.

www.supervending.ru по вопросам приобретения оборудования звоните 8-499-409-8145

TRANSPORT AND POSITIONING

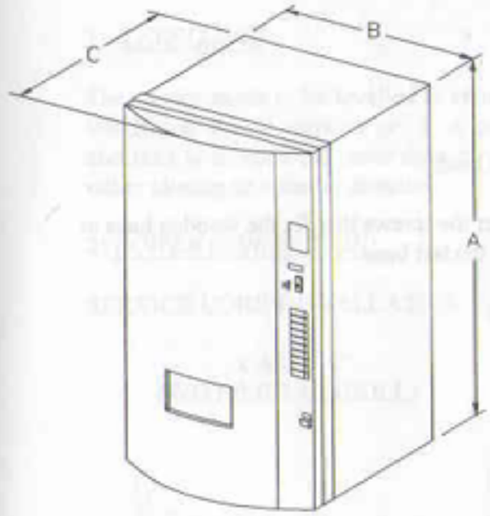

Door type:
ML: MARKETING LANDSCAPE DOOR
LS: LANDSCAPE DOOR
DD: "D" DOOR
CD: CURVED DOOR
RD: ROBO DOOR

For moving the machine we suggest to use a transpallet/vending machine hand lift. The wooden base (A) allows the machine to be picked up on 4 sides (fig. 1)

DO NOT TRANSPORT THE MACHINES HORIZONTALLY.

Model	A mm	B mm	C mm	Gross weight	Net weight
336	1680	850	790	340	335
337	1680	850	790	340	335
407	1830	850	790	340	335
408	1830	850	790	340	335
409	1830	850	790	340	335
450	1830	850	790	350	345
472	1830	750	950	300	295
476	1830	750	920	300	295
477	1830	750	950	300	295
480	1830	750	950	300	295
510	1830	1010	790	340	335
511	1830	1010	760	340	335
513	1830	1010	790	340	335
519	1830	1010	790	340	335
541	1830	850	920	340	335
542	1830	850	950	340	335
543	1830	850	955	340	335
544	1830	850	955	340	335
545	1830	850	920	340	335
546	1830	850	955	340	335
549	1830	850	950	340	335
550	1830	850	955	340	335
600	1830	1010	920	325	370
601	1830	1010	920	375	370
609	1830	1010	790	375	370
678	1830	1010	950	375	370
681	1830	1010	920	375	370
682	1830	1010	950	375	370

After having transported the machine near the installation area, remove all packing material, pull out the service cord trough the opening in the rodent grill and move it to the final position.

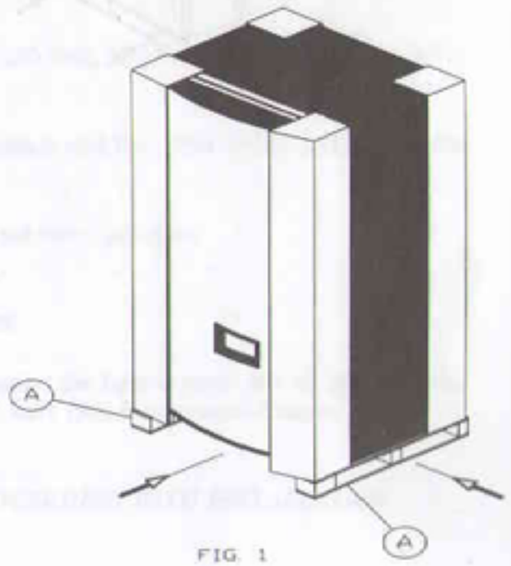

FIG. 1

www.supervending.ru по вопросам приобретения оборудования звоните 8-499-409-8145

HOW TO REMOVE THE WOODEN BASE

1) With a trans pallet lift up the vendor from the flor (front hold)

2) With a 10 adjustable spanner (a ratchet spanner) unfasten the screws that fix the wooden base to the vendor: 2 screws for the right Base and 2 screws for the left base

3) Mount the 4 levelling screws to the base of the machine.

4) Lean the vender on the floor.

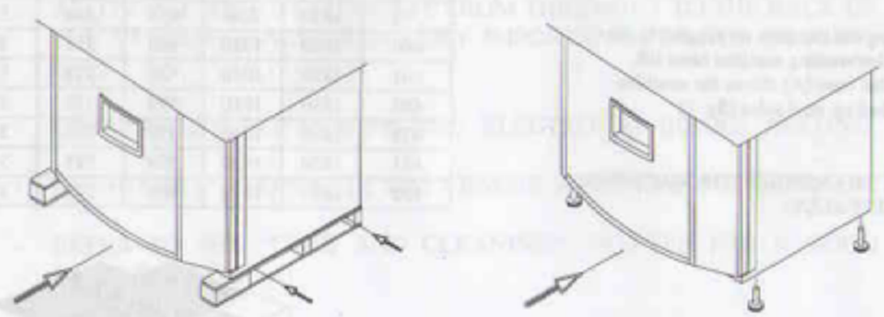

www.supervending.ru по вопросам приобретения оборудования звоните 8-499-409-8145

INSTALLATION

1) *LEVELLING:*

The vendor needs to be levelled to assure proper working, it is provided with 4 levelling screws on which you should work to get it. A practical method to control if levelling is done with enough accuracy is to open the outer door in different positions and check that it is not moving alone in either closing or opening direction.

2) *POWER CONNECTION:*

SERVICE CORD INSTALLATION

CASE "A"
(WITH METAL GRILL)

CASE "B"
(WITH PLASTIC GRILL)

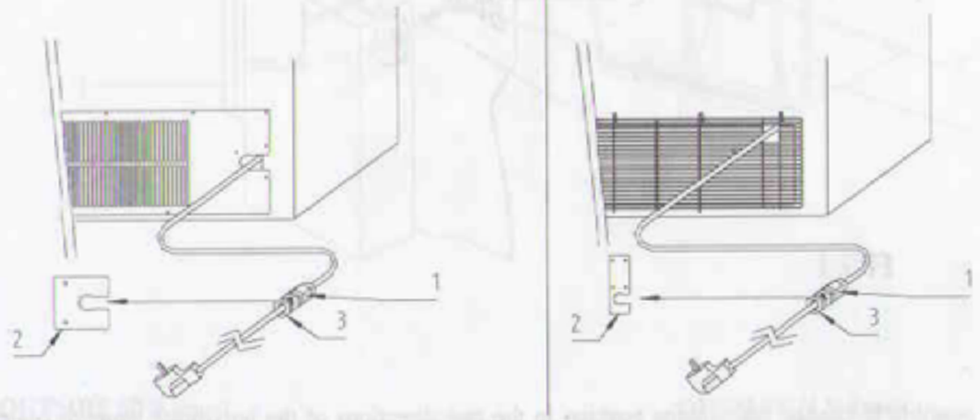

Once the fairled (1) is inserted into the plate (2), fasten the nut (3).

This machine must be connected to a power supply of 230 Volt, 50 Hertz. Any voltage under 207 v or over 253 v can cause a bad performance.

Make sure that the socket is supplied with ground contact and that, after connection, the vendor results properly grounded.

Make sure the neutral wire is the one blue coloured, if not invert polarities.

DO NOT ABSOLUTELY USE EXTENSION CORDS.

The machine can now be connected to the power supply, the lighted panel and all leds showing empty columns will switch on and the cooling unit will start. (See Description - Chapter 2).

REMOVE POWER FROM VENDOR BEFORE PROCEEDING WITH INSTALLATION

www.supervending.ru по вопросам приобретения оборудования звоните 8-499-409-8145

2) *COIN MECHANISM INSTALLATION (fig 1):*

Hook the coin mechanism on the 3 screws (E) placed on the coinage door (F).
Check that the coin mechanism has the coin entrance in line with the exit of the coin entrance funnel (G) and that the distance between the two parts is not more than 10 mm.
The mentioned distance is simply adjustable by loosening the 3 fastening screws (H) on the door and thereafter moving it upwards o downwards. After doing this operation remember to tighten the screws again.

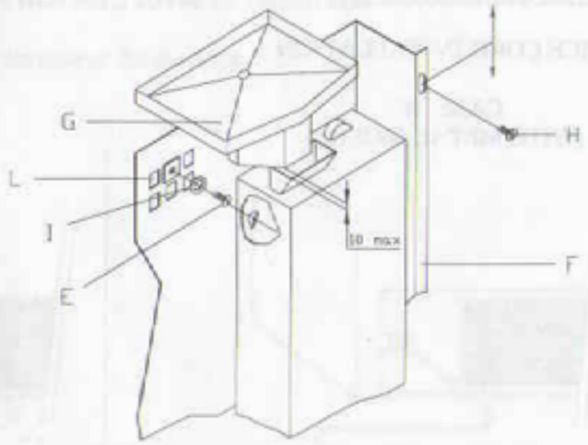

FIG. 1

It is possible to change the coinage position in the two directions of the horizontal plane to adapt products of some manufacturers that dc not follow exactly the international standards. To move in left-right direction change the (L) position of plastic snap-in nuts just removing the supporting screws before repositioning them.

It is also possible to move the coin mechanism to front or to back by installing spacers (washers I) between the coinage door and the back of the coinage bracket.

Once the setting is done remove the rejector and tighten the 3 supporting screws (E).
(These operations are not necessary if you use a coin mechanism suggested by Vendo Italy S.p.A.)

Actuate the coin return button (M) and check that the mechanism works properly. It is most important that the rejector opens as much as possible. If this does not happen you will have to adjust the height of the coin return motor.

Connect the coin mechanism to the MDB connector which is insert on a bracket close to the coinage.

WARNING: Coinages with Executive protocol have two connectors; a power supply connector which comes directly from the transformer box, and a communication connector from the main board

www.supervending.ru по вопросам приобретения оборудования звоните 8-499-409-8145

DESCRIPTION

OUTSIDE (MD door)

1) CABINET
2) DOOR
3) LIGHTED SIGN FACE
4) COIN INSERT SLOT
5) SELECTION BUTTONS
6) DOOR LOCK
7) COINS RETURN
8) DELIVERY EYELET
9) P.O.S. WINDOW

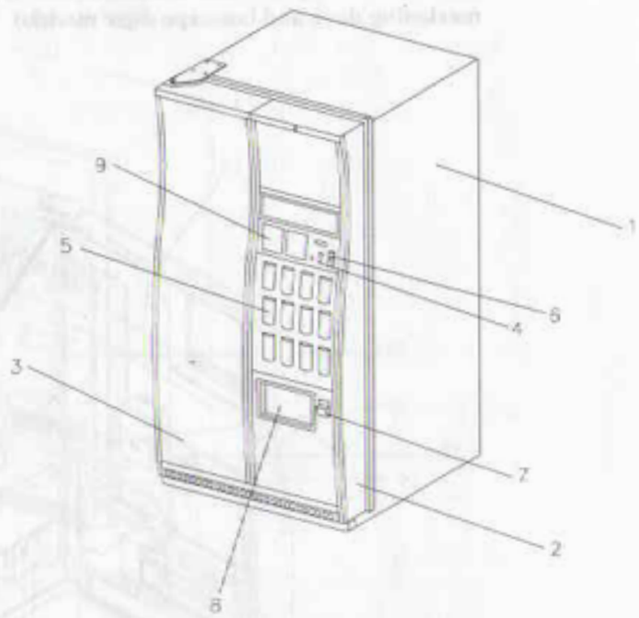

OUTSIDE (DD door)

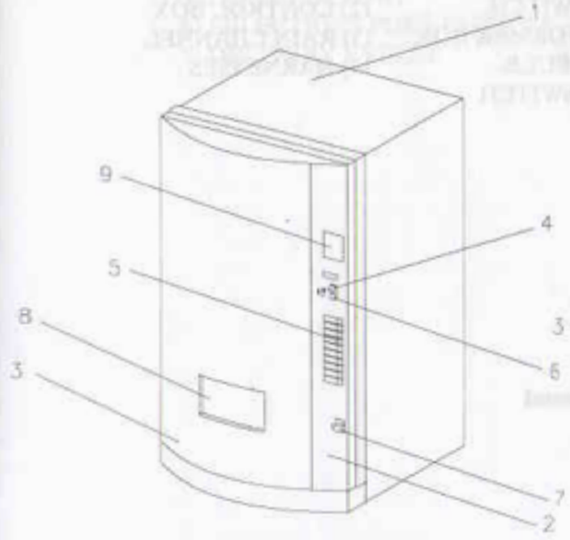

OUTSIDE (LS door)

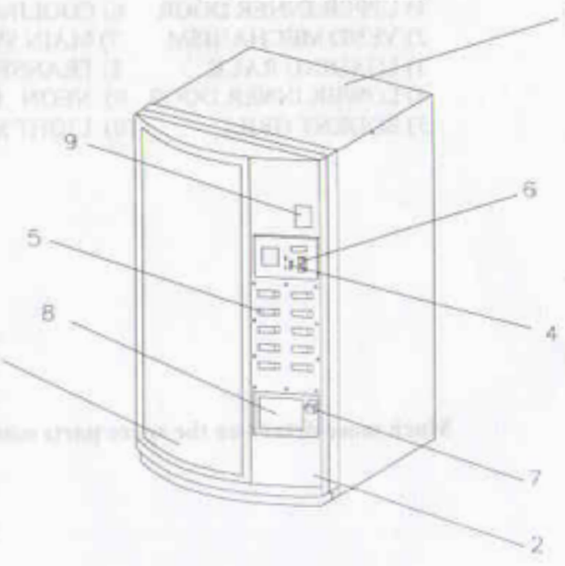

www.supervending.ru по вопросам приобретения оборудования звоните 8-499-409-8145

INSIDE

(due to similarity of construction you can refer to same drawing for both marketing door and lanscape door models)

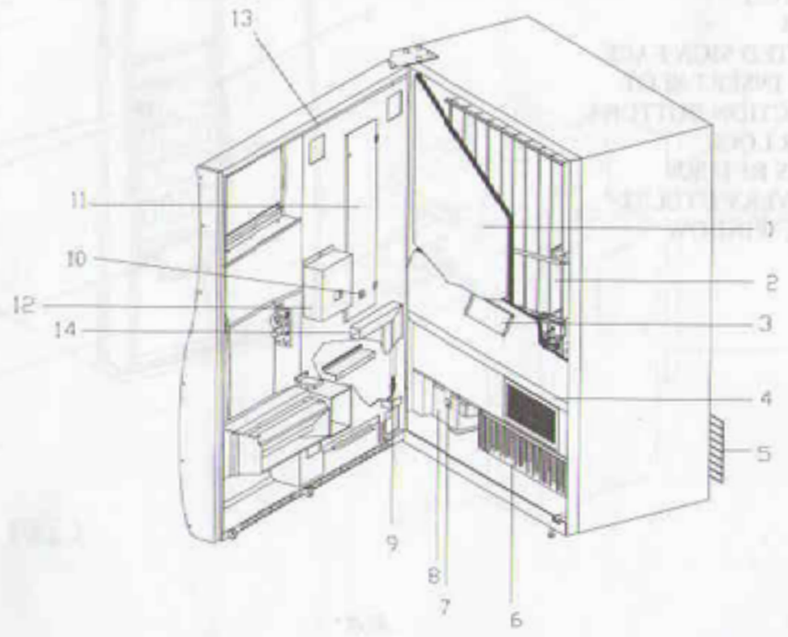

1) UPPER INNER DOOR
2) VEND MECHANISM
3) LOADING RACK
4) LOWER INNER DOOR
5) RODENT GRILL
6) COOLING UNIT
7) MAIN SWITCH
8) TRANSFORMER BOX
9) NEON BULB
10) LIGHT SWITCH
11) BALLAST BOX
12) CONTROL BOX
13) RAIN CHANNEL
14) HARNESSES

Much more details on the spare parts manual

www.supervending.ru по вопросам приобретения оборудования звоните 8-499-409-8145

OUTSIDE VIEW (RD door)

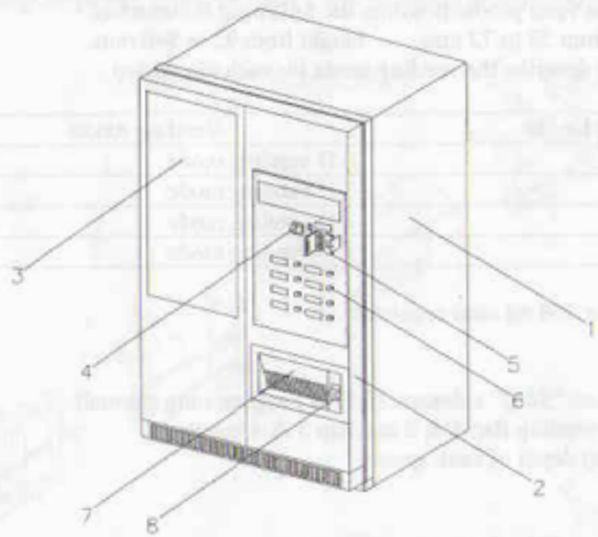

1) CABINET
2) DOOR
3) NEON PANEL GLASS
4) SLIDE COINS INSERT
5) DOOR LOCKING
6) SELECTIONS PUSH BUTTOM
7) DELIVERY EYELET
8) COIN RETURN

www.supervending.ru по вопросам приобретения оборудования звоните 8-499-409-8145

COLUMN SET-UP

This machine can vend products within the following dimensions:
Diameter from 53 to 72 mm, height from 92 to 340 mm.
The follow table describe the vending mode for each dimension :

Product height	Vending mode
53*-120 mm	4 D vending mode
120 – 180 mm	3 D vending mode
180 – 245 mm	2 D vending mode
245 – 340 mm	1 D vending mode

- Special kit for 250 ml cans required.

Set 1D mode:
- Program 1D on "Sdep" submenu (follow programming manual)
- Connect the vending flap 1 & 2 and flap 3 & 4 together
- Set the correct depth of back spacer

Set 2D mode:
- Program 2D on "Sdep" submenu (follow programming manual)
- Connect the vending flap 1 & 2 and flap 3 & 4 together
- Set the correct depth of back spacer.

Set 3D mode:
- Program 3D on "Sdep" submenu (follow programming manual)
- Connect the vending flap 1 & 2 and flap 3 & 4 should work indipendently.
- Set the correct depth of back spacer.

Set 4D mode:
- Program 4D on "Sdep" submenu (follow programming manual)
- Leave the vending flap disconnected, all vending flap should work indipendently
- Set the correct depth of back spacer

Setting of back spacer depth:

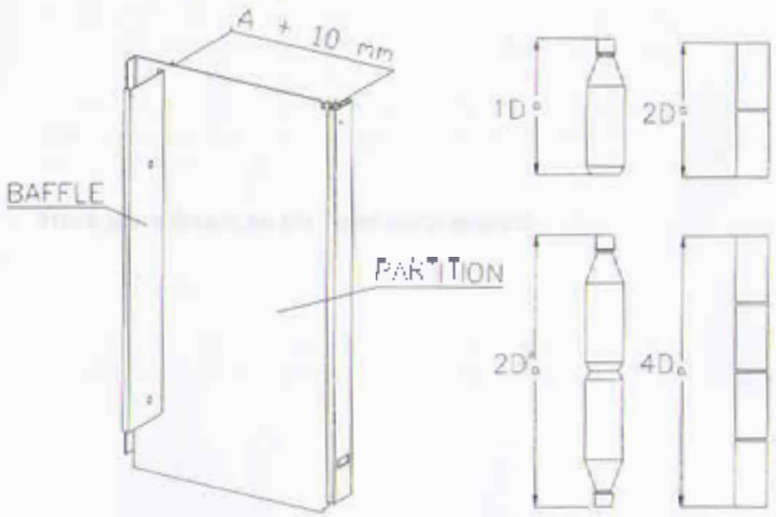

www.supervending.ru по вопросам приобретения оборудования звоните 8-499-409-8145

Vending flap connection:
The flaps arrangement at the bottom of each vend mechanism is as shown in the following drawing. The connections 1& 2, 3 & 4, accordingly to vended products, is done pushing the plastic locker of flaps 1 and 3 into the slots of flaps 2 and 4.

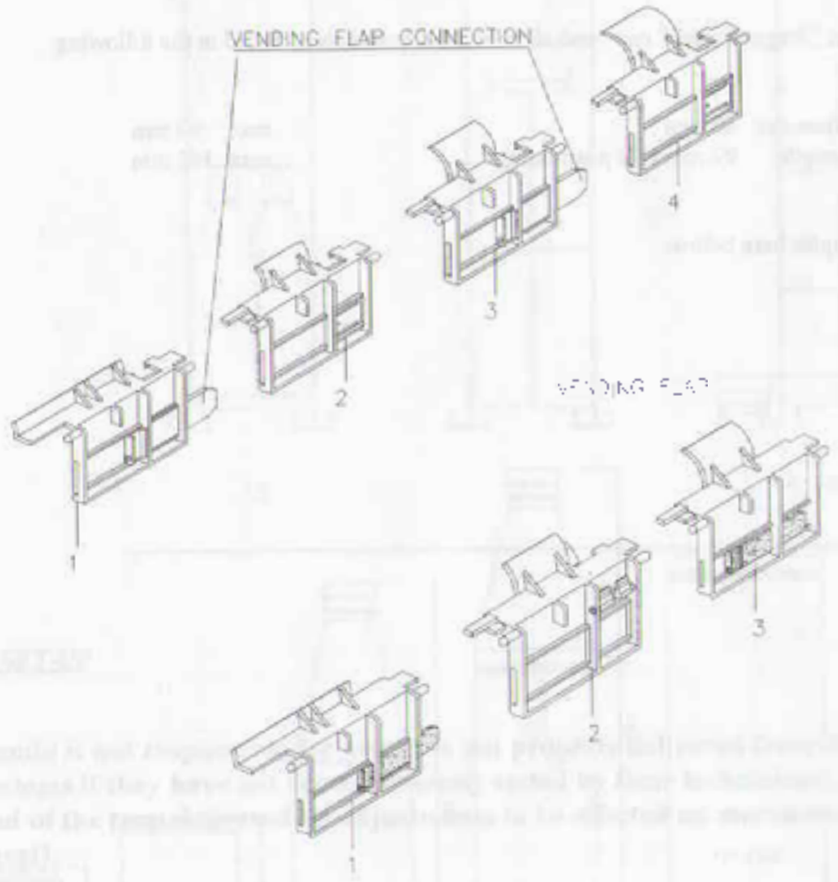

Final check:
Load the column until it is full.
Make selections and check the proper reload and delivery of the products.
If you have some problem probably you have to add some partition spacer or other special kit (for example for .25 L cans).
In this case contact Vendo to know your nearest authorised technician.
You can also send your product to Vendo, we will make the necessary tests to find your correct set-up.

Most common products have already been tested in the factory. Ask the set-up number of the product you want to vend and refer to this number in any order of vending machines. We will build the machine accordingly to your specification.

www.supervending.ru по вопросам приобретения оборудования звоните 8-499-409-8145

"STAGGER STACK" MECHANISM

1) POSSIBLE USES:

The column "Stagger-stack" can vend all cylindrical products included in the following measures:

minimum diameter	66 mm	max. 90 mm
minimum length	92 mm (3D positioning)	max. 345 mm

Some examples here below:

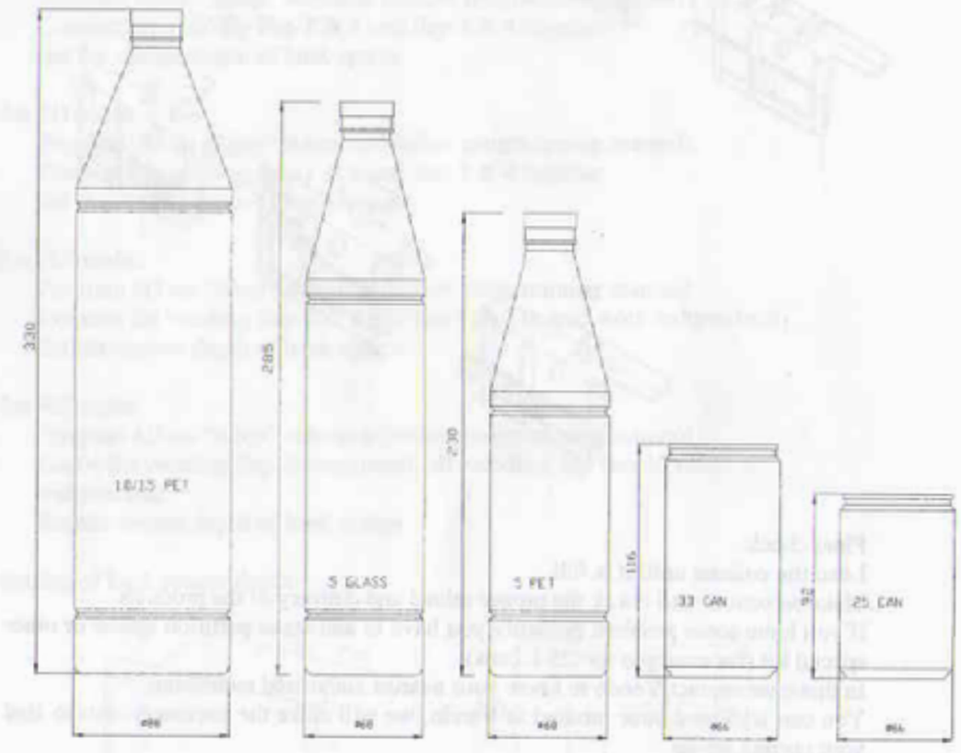

Vendo reserves the right to approve the vend of all products which are not perfectly cylindrical only after testing them.

Moreover Vendo is not responsible for uses and applications of the vender which are not explained in this manual.

1) CHARGMENT:

www.supervending.ru по вопросам приобретения оборудования звоните 8-499-409-8145

This Mechanism can vend packages stacked in following ways:

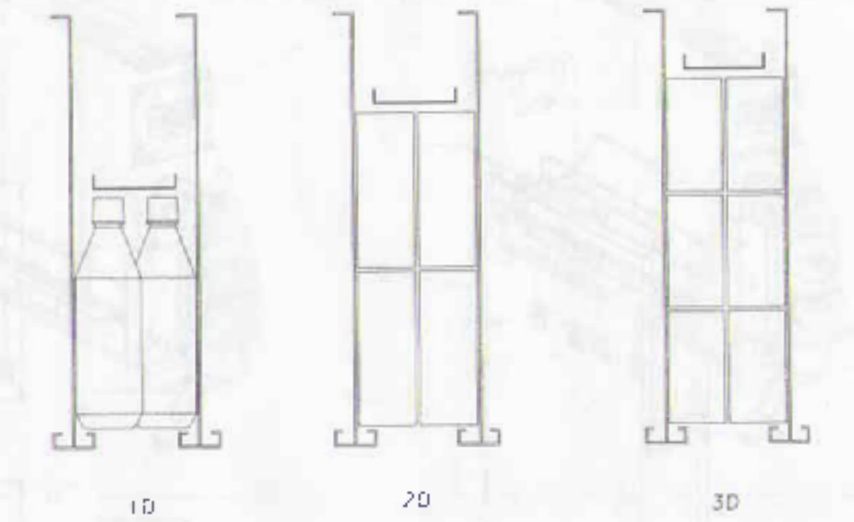

3) SET-UP

Vendo is not responsible for products not properly delivered from their vend systems if they have not been previously tested by their technicians, and at the end of the tests delivered all adjustments to be effected on mechanism (set-up sheet).

We suggest you should not change the set-up of a column if you do not have a set-up sheet issued by Vendo.

Instructions for conversion of one column or more:

1 Set the bucket of the column to be converted on load position (horizontal bucket)

2 Remove power from vender (by actuating the main switch)

3 Open both inner doors and disconnect column to be converted

4 Remove fixing screw of the column placed below vend motor(on mechanism support) ; lift the column and extract it

5 It is now possible to separate the motor from the column itself by removing 4 screws; this procedure is necessary only to modify the width of the column

www.supervending.ru по вопросам приобретения оборудования звоните 8-499-409-8145

6 Look the set-up sheet to have the right code of the 4 plate (B) to make a correct width of the column.

7 Positioning the baffle (C) with 4 screws , so to obtain a distance a +10mm, as draw.

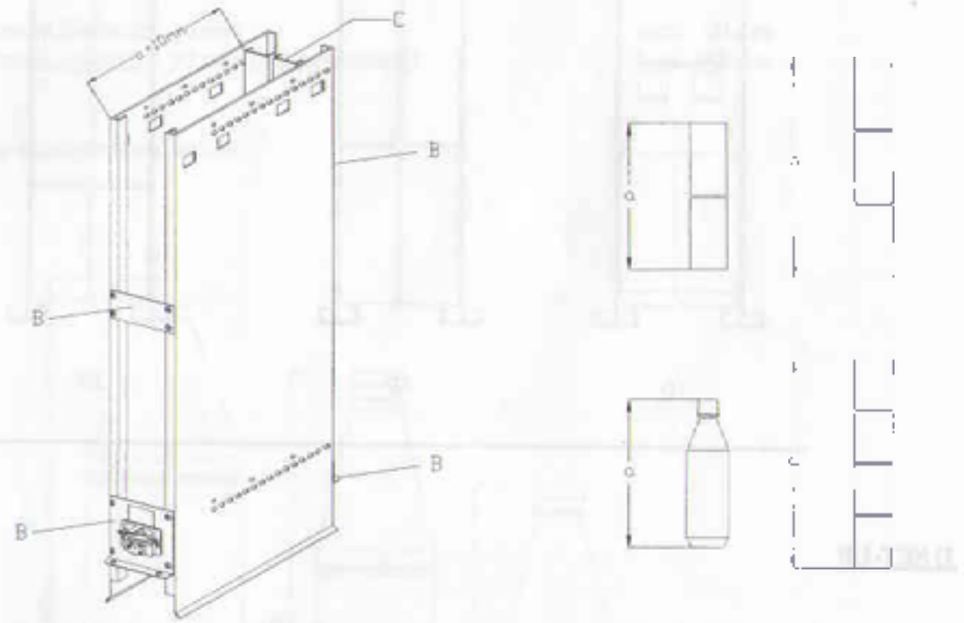

8 For 2D and 3D columns, place the black plastic cam which is behind the motor in order to make the correct number of vends per revolution. For 2D vend a vending cam can have 2 free slots. For 3D vend a vending cam can have 3 free slots.

9 Use spacers (2) and (3) of different lenght in order to get a 2D or 3D vend (Pic.1). To install or remove spacers refer to the set-up sheets.

www.supervending.ru по вопросам приобретения оборудования звоните 8-499-409-8145

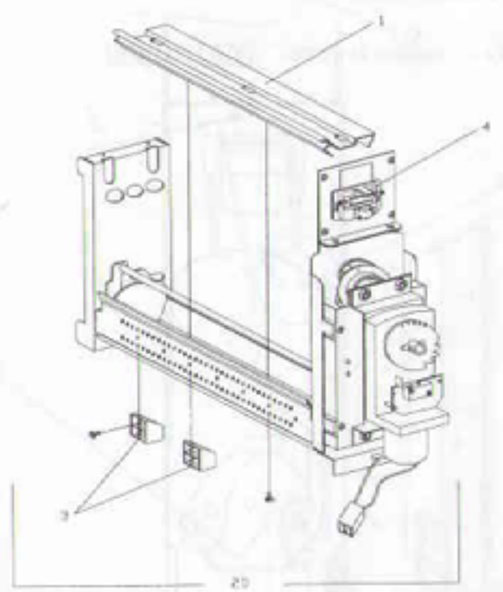

PIC 1

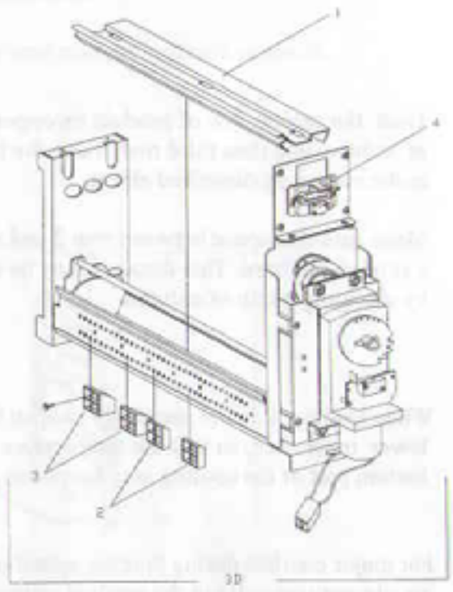

10 Adjust the height of sold-out lever (4) until the machine shows empty column when there still are two rows of products in the column (or refer to set-up sheet).

11 For some set-up (Pic.1) is necessary to install , bucket plastic conveyor (1), or spacers (to be installed inside the column).The code and the quantity are always mentioned on set-up sheets.

12 Re-install the column on the machine and connect it to the mechanism harness.

13 Give power to vending machine.

FIRST CHARGMENT:

Place the first product on the shelf (R) so that it is against the front plate of mechanism and,if the column is a 2D or more, add other products directly behind it. At this time there must not be any product in the bucket (I).

www.supervending.ru по вопросам приобретения оборудования звоните 8-499-409-8145

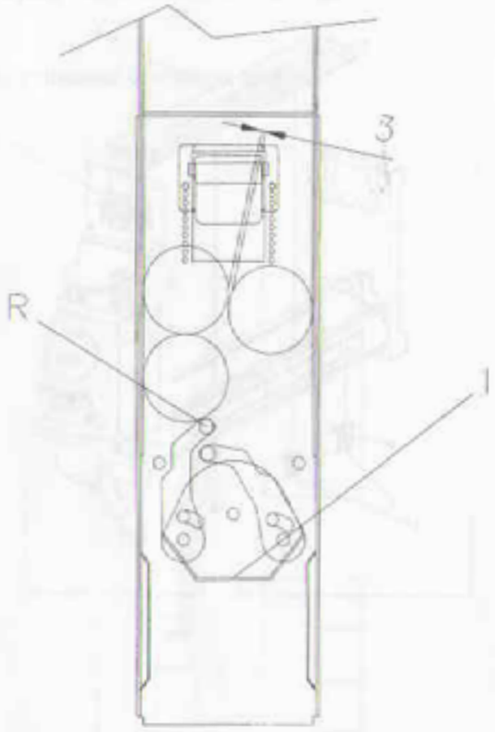

Load the second row of product on opposite side of column and then third row above the first, in the same way described above.

Make sure that space between row 2 and row 3 is of about 3mm. This distance may be varied by changing width of column.

When loading, it is not necessary to open the lower inner door, so that the temperature in the bottom part of the cooling area keeps low.

For major comfort during loading operation we suggest you pull out the product support.

Continue to load column until at least 10-12 rows of product have been loaded.

Give power to vender. Having the coinage already been installed (see chapter coinage installation) and some products loaded, the display must show an advertising message (not the writing "sold-out"), and sold out red lamps, placed near each selection push button, must be off.

Assuming that the amount of each selling price is already set on the electronic board or coinage, close both the inner and the outer door, insert proper amount of money and make a selection.

Repeat same procedure for each selection.

During this first series of selections the following must happen:

Each single mechanism takes care of placing the product in its correct position (for 2D and 3D columns make more than one selection before the column delivers the product.

From now on, to any selection made should correspond the delivery of one product. The each vend column so that the bucket conveyor rotates at least twice for each vend mechanism.

Open doors and complete loading operation.

ENGLISH

www.supervending.ru по вопросам приобретения оборудования звоните 8-499-409-8145

TETRA-PAK COLUMN

IMPORTANT: Tetra-pak column is a module set to vend cans and tetrapak products.

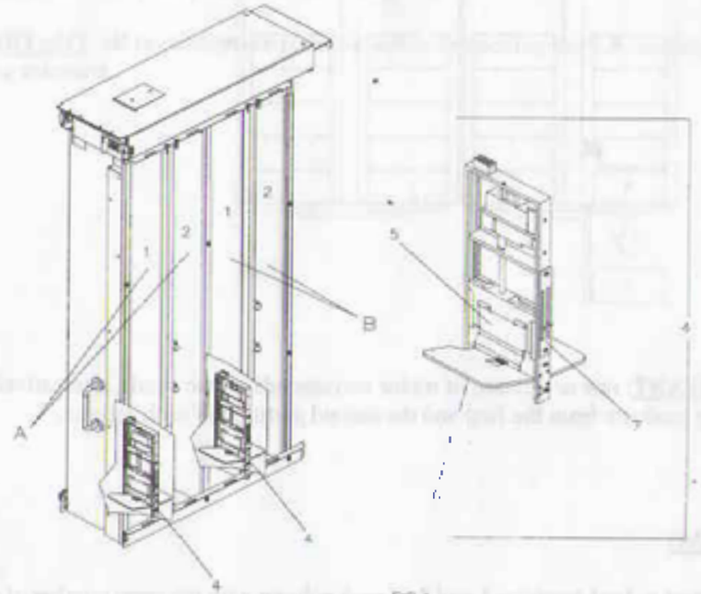

FIG.1

OPERATION

Tetra-pak column(fig.1) is made of two columns (A and B) (two selections are possible) divided into two partitions (1 and 2).
Each column is run by a motor assy (4),and this motor assy, alternatively starts the two dividing doors (5) and the two vending flaps (6).

VEND SEQUENCE

Product selection.
Start motor.
Motor assy (4) open the dividing doors (5), by holding products inside the column, apart from the last one (A) (figure 2).
The motor stops when the cam close the vending flap (6).

ENGLISH

www.supervending.ru по вопросам приобретения оборудования звоните 8-499-409-8145

FIG.2

IMPORTANT: one revolution of motor corresponds to two vends, alternatively releasing products from the first and the second partition of each column.

LOADING

Is important to load partition 1 and 2 of each column with the same number of products (fig.3), because, alternating the vend between the first and second partition, the sold-out is actuated when one partition is completely empty.
When loading is completed, close the front gate and make sure they are properly hooked.
We suggest you load products with "straw", always with the straw upwards.

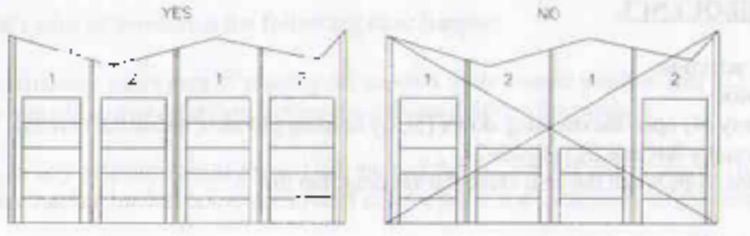

Fig.3

www.supervending.ru по вопросам приобретения оборудования звоните 8-499-409-8145

SETTING

We recommend you change the setting of a column only if you have a Set- up sheet issued by Vendo and corresponding to the product you want to vend.
For product with a different height must be regulation the correct height of the dividing doors (5) by the pin (7) on motor assy (4).

IMPORTANT: all regulation are possible without removing the T.P. module on the vending machine.

www.supervending.ru по вопросам приобретения оборудования звоните 8-499-409-8145

INFORMATION - WARNING SIGNALS

Vendo vending machines have a series of messages to make the user aware of the dangers existing when handling the machine.
Here below are some examples:

1) Power of lamps. The indication is for each single lamp.

2)Warning: the vendor must be properly grounded.

3) Type of refrigerant used.

CFC FREE R134A

4) Warning: Parts behind the cover are under high voltage

5) Fuse indicator.

F10A/250V

www.supervending.ru по вопросам приобретения оборудования звоните 8-499-409-8145

6)Vending machine name plate:

Production date: month/year

7) WARNING: be extremely cautions when handling vend mechanism

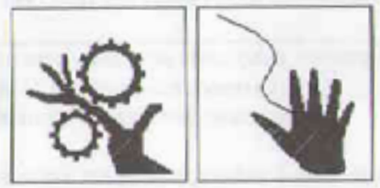

8)Final inspection certificate.

INSULATION TESTED		HIPOT TESTED	
COOLING UNIT TESTED		MAIN BOARD SET-UP AND TESTED	
VEND MECHANISM TESTED		LIGHTS WORKING	
SAFETY CUT-OUT SWITCH TESTED		ALL DOORS CHECKED FOR PROPER CLOSING	
		FINAL ACCEPTANCE	

- **When changing a blown fuse use the same type, amperage and voltage indicated.**
- **When refilling cooling unit use the same refrigerant and quantity indicated.**
- **When replacing a lamp use one of same wattage.**
- **Before removing a part with label 4 disconnect power.**
- **When ordering spare parts provide the model and serial numbers.**
- **Your machine has passed a factory electrical insulation test (report is inside the machine). Any time you remove a part marked with label 4 or replace an electrical component you must repeat the test.**

www.supervending.ru по вопросам приобретения оборудования звоните 8-499-409-8145

CARE AND CLEANING

For the vendor to work in good conditions it is very important that it is clean and cared for. Please follow the suggestions below:

REMOVE POWER FROM THE VENDOR BEFORE CLEANING AND HANDLING ELECTRICAL AND MECHANICAL PARTS.

Painted areas	-Wash vendor with soap and water. The exterior may be waxed with any good automobile wax. - Paint splashes, grease, and glazing compound may be removed by rubbing with solvents.
Scratch removal	- Hairline scratches and minor abrasion can be removed (or minimised) by using any good quality automobile polish.
Lexan signs	- When cleaning the lexan sign faces the following cleaning procedure is recommended: - wash sign with a mild soap or detergent and lukewarm water - using a soft cloth or sponge, gently wash the sign. Do not scrub. - rinse well with clean lukewarm water - dry thoroughly with a chamois or cellulose sponge to prevent water spotting *Caution: Almost all organic solvents, petroleum, spirits or alcohol are not compatible cleaning materials for lexan signs. Usage of any of these materials could permanently damage sign.*
Refrigeration area	- The condenser and evaporator must be kept clean for efficient operation. You must be sure that all vanes and tubing are clean and clear of obstruction to allow free air passage. Clean with a brush, a vacuum cleaner or compressed air. ATTENTION: to remove the cooling unit you must wear gloves.
Delivery chute	- keep delivery chute clear of dirt and incrustation.
Drain tube	- make sure the drain tube is clear of obstructions.
Crown box	- periodically empty the crown box (when used)

ENGLISH

www.supervending.ru по вопросам приобретения оборудования звоните 8-499-409-8145

SuperVending

GENERAL CAUTIONS	- Do not use in any case: - abrasive cleaners - highly alkaline or acid cleaners - benzene - leaded gasoline - acetone - Never scrape with razor blades or other sharp instruments - Do not clean in hot sun or at elevated temperatures - Do not clean the vendor with water spout - Take care when you clean parts protected by covers or electrical components. In these cases power must be removed from vendor. - Do not use water or any other liquid detergent - When using any liquid cleaning material, remove power from the machine.

ENGLISH

www.supervending.ru по вопросам приобретения оборудования звоните 8-499-409-8145

TROUBLE SHOOTING GUIDE

The following table reports all the most common troubles that could happen on our vending machines. Below are listed all the possible causes together with the suggested solutions to eliminate them.
We remind you that our after- sales service is at your complete disposal for any technical assistance you may need.

Trouble	*Possible causes*	*Suggested solutions*
It returns all coins	no power to vendor	check the power supply
	no power to coinage	make sure that the connection harness is not defective and that the fuse is not blown
	the coinage is out of order or the coin return lever does not close	check the coinage or replace the levers
	coin acceptor is dirty	clean the coinage with a detergent. Dry thoroughly.
	machine is empty	either all columns are empty or, those which are not empty, have signalled a product jam to the board. Check operation of all full columns with the manual test, and after that reset errors (refer to programming manual).
Coin accepted, no product vended	set prices are too high	reset prices (refer to programming manual).
	error in communication coinage - board	check connection cord between coinage and board and, if necessary replace coinage or board.
	motors are blocked	make sure that 24V reach the motor when a selection is made (refer to the programming manual)
The vend motor runs until two or three products are vended and after that the column is in sold out.	motor switch is defective	Substitute or clean motor switch.
The display shows vend counter	door close sensor is not actuated	adjust the position of door close switch actuator
The column shows sold out even if it is full	products are bridging above sold out sensor	check the column set-up is correct check the sold out switch is working
Cooling unit does not work	no power to vendor	check power supply. Check the connections of the service cord and fuses.
	failure on communication between power board and VM C	check communication harness integrity

ENGLISH

www.supervending.ru по вопросам приобретения оборудования звоните 8-499-409-8145

The compressor does not work, the condenser fan runs, the compressor is cold.	the overload protector and/or the relay do not work the relays board is defective	check overload protector or compressor starting relay. check windings of compressor have correct electrical resistance. check that driving relay has close contact check harnesses
Compressor works but cooler's temperature is not ideal.	condenser fan does not work	check circuit. Replace motor. Check if the fan is blocked, check driving relay board
	condenser is dirty	check if condenser fins are dirty or obstructed
	evaporator fan does not work	check circuit. Replace motor and make sure that fan is not blocked, check driving relay board
	system is out of gas	check if there is any leak and re-charge only with the quantity and kind of gas declared by the manufacturer.
	temperature setting is not correct	adjust set-point (refer to programming manual)
	EMS not well programmed	check that Energy Saving program is correct and change if necessary (refer to programming manual)
Compressor runs continuously	driving relay board defective temperature setting is wrong gas leakage	check driving relay board and harnesses control right temperature setting refill the cooling unit after leakage repair.
Evaporator covered in ice	evaporator motor fan not running	Check evaporator motor fan (see previous instructions)
	cold compartment sealing is not good	change gasket(s) and/or adjust inner door(s) closing. check that delivery flap is not stuck in open position

ENGLISH

www.supervending.ru по вопросам приобретения оборудования звоните 8-499-409-8145

SuperVending

www.supervending.ru по вопросам приобретения оборудования звоните 8-499-409-8145